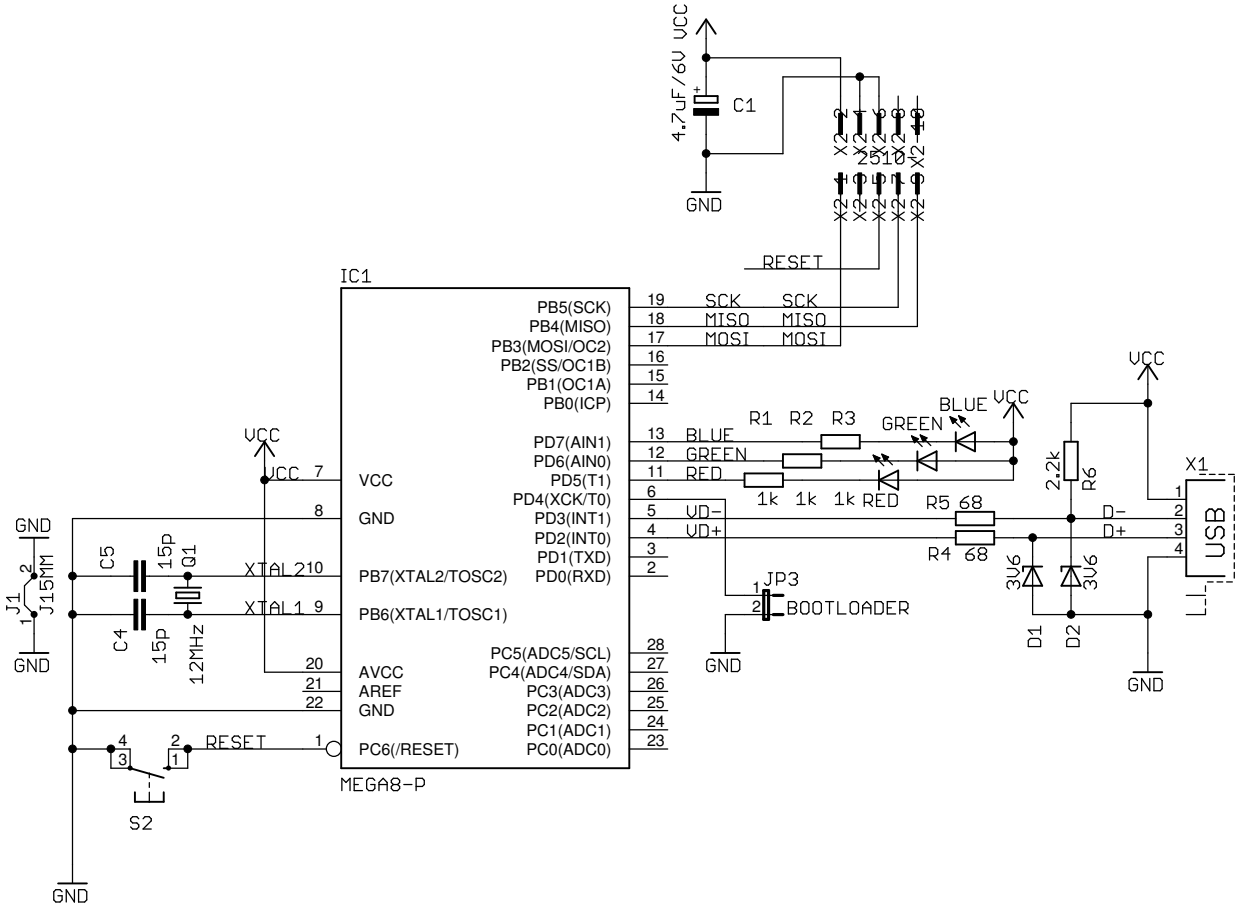

DIY-Arduino

TITLE: arduino-scratch-atmega8-11

Document Number:

REV:

Date: 25. 05. 2012. 03:02

Sheet: 1/1